IoT Network Access Technologies

Dr. Manas Khatua
Associate Professor
Dept. of CSE, IIT Guwahati
E-mail: manaskhatua@iitg.ac.in

IoT Network Access Technologies

- There are many IoT access technologies in the market today

Communications Criteria

- Communication criteria describes the characteristics and attributes of IoT access technologies
- IoT access technologies could be wired or wireless
- Wireless communication is prevalent for smart object connectivity
  - ease of deployment
  - allows smart objects to be mobile
  - moving without losing connectivity
- Few basic criteria:
  - Range
  - Frequency bands
  - Power consumptions
  - Topology
  - Constrained devices
  - Constrained-node networks

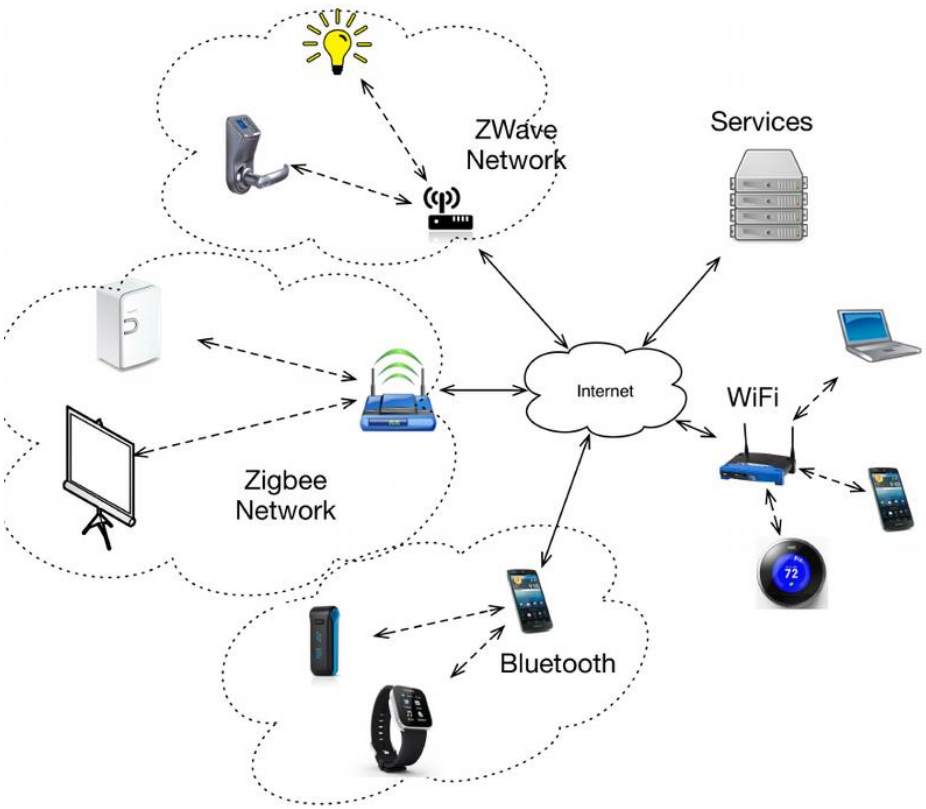

Communication Range

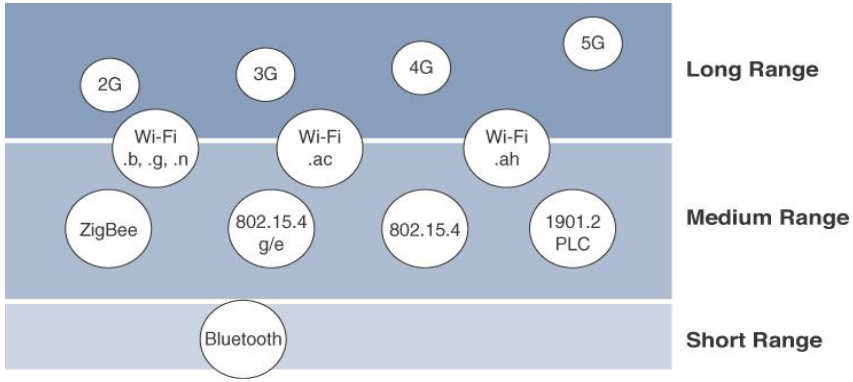

- **Short range**:
  - **tens of meters** of maximum distance between two devices
  - often considered as an alternative to serial cable
  - Example:
    - IEEE 802.15.1 Bluetooth,
    - IEEE 802.15.7 Visible Light Communications (VLC)

- **Medium range**
  - **tens to hundreds of meters** between two devices
  - **Wireless** :
    - IEEE 802.11 WiFi,
    - IEEE 802.15.4 Low Rate WPAN,
    - IEEE 802.15.4g Smart Utility Networks (SUN)
  - **Wired** :
    - IEEE 802.3 Ethernet,
    - IEEE 1901.2 Narrowband Power Line Communications (PLC)

- **Long range**
  - **greater than 1 mile (1.6 km)** between two devices
  - **Wireless** :
    - 2G, 3G, 4G,
    - IEEE 802.11ah,
    - Low-Power Wide-Area (LPWA) communications
  - **Wired** :
    - IEEE 802.3 ethernet over optical fiber,
    - IEEE 1901.2 Broadband PLC

Frequency Bands

- Radio spectrum is regulated by countries and/or organizations
  - e.g. International Telecommunication Union (ITU), Federal Communications Commission (FCC), Telecom Regulatory Authority of India (TRAI)
- Frequency bands leveraged by wireless communications are split between:

1. **Licensed**
   - applicable to long-range access technologies
   - users must subscribe to services
   - common licensed spectrum for IoT :
     - Cellular (900-2100 MHz),
     - NB-IoT (700-900 MHz)
2. **Unlicensed**
   - *Unlicensed* means that no guarantees or interference protections are offered
   - industrial, scientific, and medical (ISM) portions of the radio bands
   - well-known ISM bands for IoT :
     - 2.4 GHz, 5 GHz, 915 MHz for WiFi, BLE, ZigBee;
     - 868 MHz for LoRa

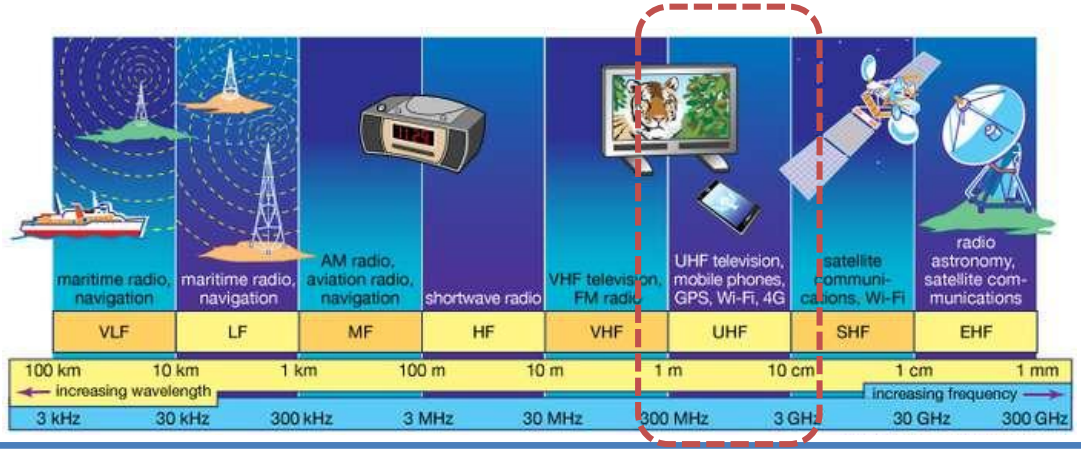

ISM Bands

ISM Bands - Industrial, Scientific and Medical

900MHz
vs.
2.4GHz
vs.
5GHz

900MHz

Advantages:
- More robust, less prone to interference
- Lower attenuation, travels further through more obstacles

Disadvantages:
- Low bandwidth prevents large data transfer, speed
- Components are larger at lower frequencies

2.4GHz

Advantages:
- Higher bandwidth allows large data transfer, speed
- Components are smaller, cheaper

Disadvantages:
- Congested band due to abundance of Wi-Fi, Bluetooth, microwaves, cordless phones
- Attenuates much more quickly, will not pass through metal

5GHz

Advantages:
- Higher bandwidth allows large data transfer, speed
- Less congested, few RF devices in this band

Disadvantages:
- Low transmit power limitations
- High attenuation in cables, requires very high gain antennas

- **India** also allow 865-867 MHz ISM band

Power Consumption

- Grid-powered node
  - node has a direct connection to a grid power source
  - communications are not limited by power consumption criteria
  - ease of deployment is limited by the availability of a power source
  - makes mobility more complex
- Battery-powered nodes
  - bring more flexibility to IoT devices
  - batteries are small in size
  - batteries can be changed or recharged
- IoT Nodes
  - Nodes are battery powered
  - It's wireless access technologies must address
    - the needs of low power consumption
    - connectivity for battery-powered nodes

Power Consumption

	Bluetooth	ZigBee	WiFi	LoRaWAN	NB-IoT
Standard	IEEE 802.15.1	IEEE 802.15.4	IEEE 802.11b	LoRaWAN	3GPP NB-IoT
Sleeping	9 µA	12 µA	30 µA	0.1 µA	3 µA
Awake/Idle	35 mA	50 mA	245 mA	1.4 mA	6 mA
Transmitting	39 mA	52 mA	251 mA	44 mA	220 mA
Receiving	37 mA	54 mA	248 mA	12 mA	46 mA
Power Supply	3.3 V	3.3 V	5 V*	3.3 V	3.6 V

* The ESP8266 module powered by 3.3 V could be used as WiFi module.

Topology

- Three main topology schemes are dominant:
  - star, mesh, and peer-to-peer (cluster tree)
- For long-range and short-range technologies:
  - star topology is prevalent
- For medium-range technologies:
  - star, peer-to-peer, or mesh topology is common

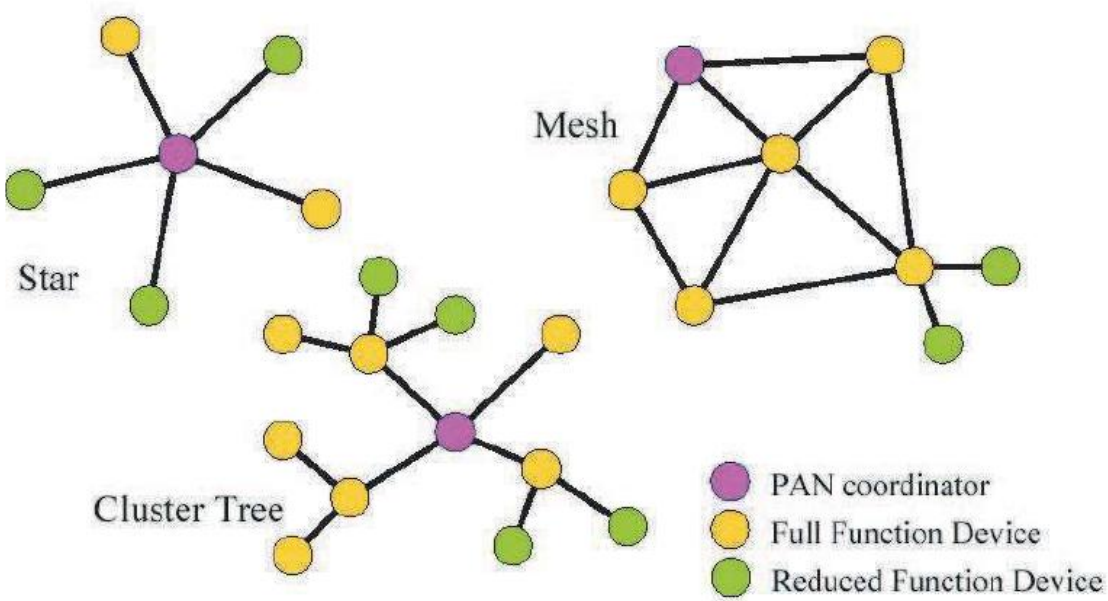

- IEEE 802.15.4, 802.15.4g, and wired IEEE 1901.2a PLC are generally deployed as a mesh topology.
- Indoor Wi-Fi deployments are mostly star topologies

FFD: A node that implements the full network functions

RFD: The device can implement a subset of protocol functions to perform just a specialized part (communication with the coordinator).

Constrained Devices

- Constrained nodes have limited resources that impact their networking feature set and capabilities.

- RFC 7228 defines three classes for constrained nodes: Class 0, 1, 2

	RAM	Flash Storage	IP stack	Security Scheme	Example
Class 0	< 10 KB	< 100 KB	Not present	No	Push button
Class 1	> 10 KB	> 100 KB	Optimized IP stack	Light	Sensors
Class 2	> 50 KB	> 250 KB	Full IP stack	Yes	Smart meter

Constrained Networks

- Constrained-node networks are often referred to as low-power and lossy networks (LLNs)

- Layer 1 and Layer 2 protocols must be evaluated using the following characteristics:
  - data rate and throughput
  - latency and determinism
  - overhead and payload.

- Data rate & throughput:
  - data rates available from 100 bps to tens of Mbps
  - actual throughput is less, sometimes much less, than the data rate
- Latency & determinism:
  - When latency is a strong concern, emergent access technologies such as Time-Slotted Channel Hopping (TSCH) mode of IEEE 802.15.4e should be considered.
- Overhead & Payload
  - The minimum IPv6 MTU size is expected to be **1280 bytes**.
  - MTU size for IEEE 802.15.4 is **127 bytes**; payload in LoRaWAN may **be from 19 to 250 bytes**
  - So, the fragmentation of the IPv6 payload has to be performed by the link layer

Comparison of Access Technologies

	WiFi	BLE	Thread	Sub-GHz: TI	SigFox	ZigBee	LoRa
Max. Data throughput	72 Mbps	2 Mbps	250 Kbps	200 Kbps	100 bps	250 Kbps	50 Kbps
Range	100 m	750 m	100 m	4 km	25 km	130 m	10 km
Topology	Star	P2P/ Mesh	Mesh/ Star	Star	Star	Mesh/ Star	Star of Star
Frequency	2.4 GHz	2.4 GHz	2.4 GHz	Sub-GHz	Sub-GHz	2.4 GHz	Sub-1GHz
Power consumption	1 Year (AA battery)	Up to years on a coin-cell battery for limited range					Few Years (AA battery)
IP at the device node	Yes	No	Yes	No	No	No	No
Deployed Consumer Devices	AP	smart phones	No	No	No	No	No

Lessons Learned

- Different Attributes of Access Technologies in IoT
  - ✓ Communication Criteria
  - ✓ Communication Range
  - ✓ Frequency Band
  - ✓ Power consumption
  - ✓ Topology
- Classifications of Constrained Nodes
- Characteristics of Constrained Networks

Thanks!

Figures and slide materials are taken from the following sources:

1. David Hanes *et al.*, “IoT Fundamentals: Networking Technologies, Protocols, and Use Cases for the Internet of Things”, 1st Edition, 2018, Pearson India.

Inside the radio wave spectrum

Almost every wireless technology – from cell phones to garage door openers – uses radio waves to communicate. Some services, such as TV and radio broadcasts, have exclusive use of their frequency within a geographic area. But many devices share frequencies, which can cause interference. Examples of radio waves used by everyday devices:

Most of the white areas on this chart are reserved for military, federal government and industry use

2.4 GHz band
Used by more than 300 consumer devices, including microwave ovens, cordless phones and wireless networks (Wi-Fi and Bluetooth)

Auctioned spectrum

Broadcast TV Channels 2-13 | **Garage door openers** | **Cell phones** | **Wireless medical telemetry** | **Cell phones** | **Wi-Fi networks** | **Satellite TV** | **Security alarms**

3 kHz | 500 MHz | 1 GHz | 1.5 GHz | 2 GHz | 3 GHz | 4 GHz | 5 GHz | 50 GHz | 300 GHz

AM radio 535 kHz to 1,700 kHz | **Remote-controlled toys** | **Broadcast TV UHF channels 14-83** | **GPS (Global positioning systems)** | **Satellite radio** | **Weather radar** | **Cable TV satellite transmissions** | **Highway toll tags** | **Police radar**

Signals in this zone can only be sent short, unobstructed distances

PERMEABLE ZONE
Frequencies in this range are considered more valuable because they can penetrate dense objects, such as a building made out of concrete

SEMI-PERMEABLE ZONE
Difficult for signals to penetrate dense objects

LINE-OF-SIGHT ZONES
Signals in this zone can travel long distances, but could be blocked by trees and other objects

Lowest frequencies | **Microwaves** | **Infrared** | **Visible light** | **Ultraviolet** | **X-rays** | **Gamma rays** | Highest frequencies

RADIO WAVE SPECTRUM

3 kHz wavelength — **300 GHz wavelength**

The electromagnetic spectrum

Radio waves occupy part of the electromagnetic spectrum, a range of electric and magnetic waves of different lengths that travel at the speed of light; other parts of the spectrum include visible light and x-rays; the shortest wavelengths have the highest frequency, measured in hertz

Lower frequency — Higher frequency

Wavelength
Distance from crest to crest

What is a hertz?

One hertz is one cycle per second. For radio waves, a cycle is the distance from wave crest to crest

1 kilohertz (kHz) = 1,000 hertz

1 megahertz (MHz) = 1 million hertz

1 gigahertz (GHz) = 1 billion hertz

Source: New America Foundation, MCT, Howstuffworks.com
Graphic: Nathaniel Levine, Sacramento Bee

© 2008 MCT